Product overview

Egmont 860-10, Alpina

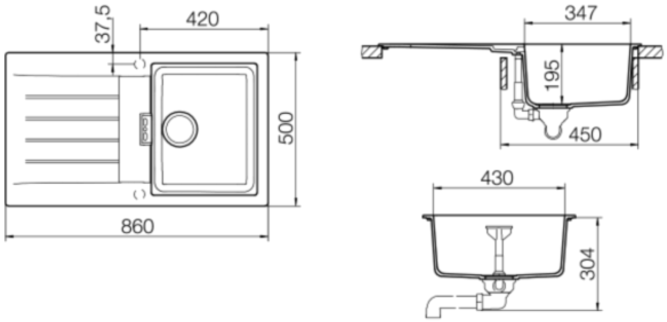


Code 20.9308.WH

Product Overview

Overall sink size:	860mm x 500mm
Bowl dimension:	430mm x 347mm
Bowl radius:	10mm
Reversible:	Yes
Cut out size:	840mm x 480mm
Min cabinet size:	450mm
Installation:	Overmount, Undermount
Material:	Quartz
Material Grade:	80-85% Quartz and 15-20% Acrylic and Pigments

Installation measurements



Tap Match

Pike



Production information

Code:	9220 WH
Tap Pressure:	Mains Pressure
WELS rating:	3 Star
Warranty:	5 years
Tap swivel spout:	360°
Cartridge:	Ceramic-Disc Cartridge
Assembled:	Italy
Material:	Brass

WELS rating



Copyright © 2024 Archant

Included accessories



Schock Dual Basketwaste & Single centre Overflow - Chrome, rect. centre type

