Product overview

Madrid Sink Mixer, Gunmetal

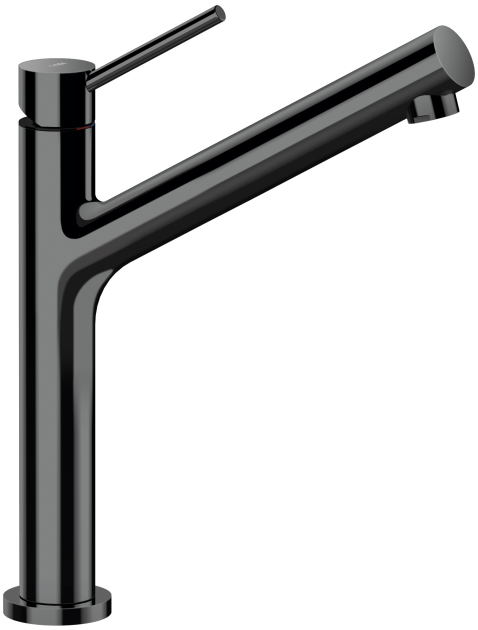

Code 40.9242.GM

Product Overview

Tap Pressure:	Mains Pressure
WELS rating:	3 Star
Warranty:	5 years
Tap swivel spout:	120°
Cartridge:	Ceramic-Disc Cartridge
Assembled:	Italy
Material:	Brass
Display Locations:	View this item in our Wellington Showroom and Christchurch Showroom.
Display Locations:	View this item in our Auckland Showroom.

Installation measurements

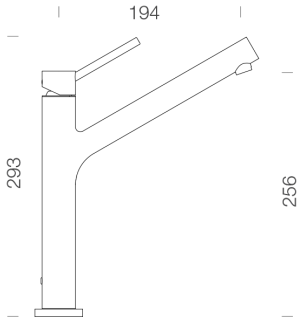

WELS rating

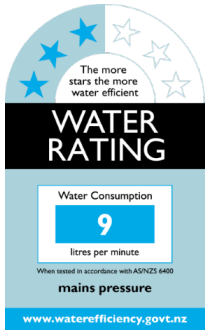

Copyright © 2024 Archant